16 AWG Quick-Connects™ Cord Sets (2-6 Pole)

• UL Recognized • cUL • IP69K Rated • RoHS Compliant • 600 V

Quick-Connects™ make replacement of electrical and electronic control devices quick and simple. Plug sets are made with Super-Trex® SOOW Ultra-Gard® Portable Cord. A superior first-line of defense against tearing, abrasion, impact, oil, ozone and most chemicals; also flame and heat resistant and offers extreme all-weather flexibility too. The molded and keyed, Thermoplastic elastomer cordset provides rapid and secure connect and disconnect and ensures a water, oil and dust tight seal.

Female Cord Set

Male Cord Set

90° Cord Set

FEATURES & BENEFITS

1. PLUG SETS MADE WITH SUPER-TREX® TYPE S00W ULTRA-GARD® PORTABLE CORD, RATED 90°C — Superior first-line defense against tearing, abrasion, impact, oil, ozone and most chemicals. Flame and heat resistant. Extreme all-weather flexibility.

2. EXTRA LONG PLUG BODY IS SPECIALLY COMPOUNDED, THERMOPLASTIC ELASTOMER — Provides long flex life, resists heat and oil deterioration.

3. SOLID BRASS CONTACT PINS ARE NICKEL COATED AND GOLD PLATED, MACHINE CRIMPED TO CONDUCTORS — Provides long life, resists corrosion, easy positive engagement. Excellent for high/low voltage and low level signal applications.

4. EXTRA LONG GROUNDING PIN — Ensures first-in, last-out contact for safety.

5. PLASTIC FRICTION RING BETWEEN COUPLER AND PLUG BODY — Increases pull-out strength, ensures uniform tightness.

6. UNIQUE STAINLESS STEEL SLEEVE OVER THE GOLD PLATED FEMALE PINS — Prevents pin deformation resulting in loss of signal and electrical continuity. Superior performance in high vibration and continuous motion environments. Probe proof.

7. MOLDED AND KEYED ASSEMBLY — Provides rapid and secure connect and disconnect. Ensures a water, oil, and dust tight seal.

8. HARD COATED MIL SPEC. ANODIZED ALUMINUM KNURLED COUPLING RING — Resists corrosion, provides quick and secure assembly.

9. SHELL SIZE — A (7/8"), B (1"), C (1-1/8") and D (1.5").

ORDERING INFORMATION *(MINIMUM PURCHASE MAY BE REQUIRED IF PRODUCT NOT STOCKED)*

FEMALE PLUGS

PART NO.					FEET	METERS
2 POLE	3 POLE	4 POLE	5 POLE	6 POLE		
CL12C01F003	CL13C02F003	CL14C05F003	CL15C07F003	–	3	0.91
CL12C01F006	CL13C02F006	CL14C05F006	CL15C07F006	CL16C09F006	6	1.83
CL12C01F012	CL13C02F012	CL14C05F012	CL15C07F012	CL16C09F012	12	3.66
CL12C01F020	CL13C02F020	CL14C05F020	CL15C07F020	CL16C09F020	20	6.10

MALE PLUGS

PART NO.					FEET	METERS
2 POLE	3 POLE	4 POLE	5 POLE	6 POLE		
CL12A01F003	CL13A02F003	CL14A05F003	CL15A07F003	–	3	0.91
CL12A01F006	CL13A02F006	CL14A05F006	CL15A07F006	CL16A09F006	6	1.83
CL12A01F012	CL13A02F012	CL14A05F012	CL15A07F012	CL16A09F012	12	3.66
CL12A01F020	CL13A02F020	CL14A05F020	CL15A07F020	CL16A09F020	20	6.10

Specifications subject to change. For complete specifications and availability, ask your TPC Sales Representative or call 800-521-7935.

16 AWG Quick-Connects™ Cord Sets (2-6 Pole) *(Continued)*

ORDERING INFORMATION *(MINIMUM PURCHASE MAY BE REQUIRED IF PRODUCT NOT STOCKED)*

90° FEMALE PLUGS					
PART NO.				FEET	METERS
3 POLE	4 POLE	5 POLE	6 POLE		
CL13D02F003	CL14D05F003	CL15D07F003	CL16D09F003	3	0.91
CL13D02F006	CL14D05F006	CL15D07F006	CL16D09F006	6	1.83
CL13D02F012	CL14D05F012	CL15D07F012	CL16D09F012	12	3.66
CL13D02F020	CL14D05F020	CL15D07F020	CL16D09F020	20	6.10

MALE / FEMALE EXTENSION SET						
PART NO.					FEET	METERS
2 POLE	3 POLE	4 POLE	5 POLE	6 POLE		
CL22E01F003	CL23E02F003	CL24E05F003	CL25E07F003	CL26E09F003	3	0.91
CL22E01F006	CL23E02F006	CL24E05F006	CL25E07F006	CL26E09F006	6	1.83
CL22E01F012	CL23E02F012	CL24E05F012	CL25E07F012	CL26E09F012	12	3.66
CL22E01F020	CL23E02F020	CL24E05F020	CL25E07F020	CL26E09F020	20	6.10

DIMENSIONAL INFORMATION

2, 3, 4, 5, 6 POLE STRAIGHT DIMENSIONS

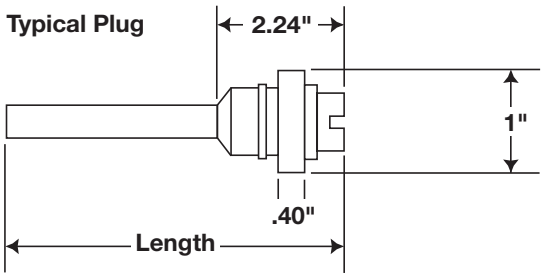

2, 3, 4, 5 POLE 90° PLUG DIMENSIONS

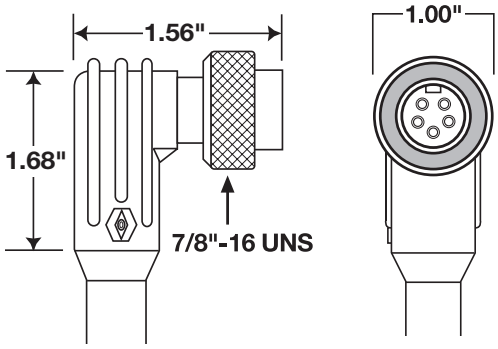

FACE VIEW OF FEMALE CONNECTORS "A" SIZE (7/8"-16 COUPLING THREAD)

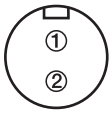 2 POLE	3 POLE	4 POLE	5 POLE	6 POLE A Size
1. White 2. Black	1. Green 2. Black 3. White	1. Black 2. White 3. Red 4. Green	1. White 2. Red 3. Green 4. Orange 5. Black	1. White 2. Red 3. Green 4. Orange 5. Black 6. Blue